About Java

03 March 2026 23:02

What is Java ?

- Java is a platform independent multi-paradigm programming language.

Note : Multi-paradigm means it supports multiple styles of programming.

Java Supports

1. Object-Oriented programming [from beginning version 1.0]
2. Functional programming [From Java 8v]
3. Modular programming [From Java 9v]
4. Data-oriented programming [From Java 17v]
5. Procedural programming [From Java 22v]

In future versions, it may support scripting style programming.

- For proof visit the website
  open jdk.org --> scroll down --> click on 21 --> click on 445 link
  --> scroll down you can find a statement "Java is multi-paradigm language."

Who invented Java ?

- Java is invented by Mr. James Gosling.
- In Sun Microsystems in the year 1991, and

- It is released in the year 1995. The version is released only for testing purpose

- The first version for project development is released in the year 1996 as Java 1.0

- The latest version of Java is 25

- Currently Java is with Oracle Corporation in the year 2010 (the version number Java 7)
- Oracle Corporation acquired Java and all other products of SUN microsystems.

Why java is invented?

- Java is invented to achieved platform independency for developing internet based business applications

Types of Applications

- In the computer world all software or project or applications are basically divided into 2 types
  1. Stand-alone applications
  2. Internet applications

- Stand-alone application
  - An application that is installed in one system and if it is accessible only within this system with a local call, and cannot be accessible from other systems with a network via internet then we call it as stand-alone application.
  - A stand-alone application is a single user and single computer application.
  - For example:
    - Calculator, Notepad, Antivirus, Ms-Office, Game software etc.
      Browser, Mobile apps

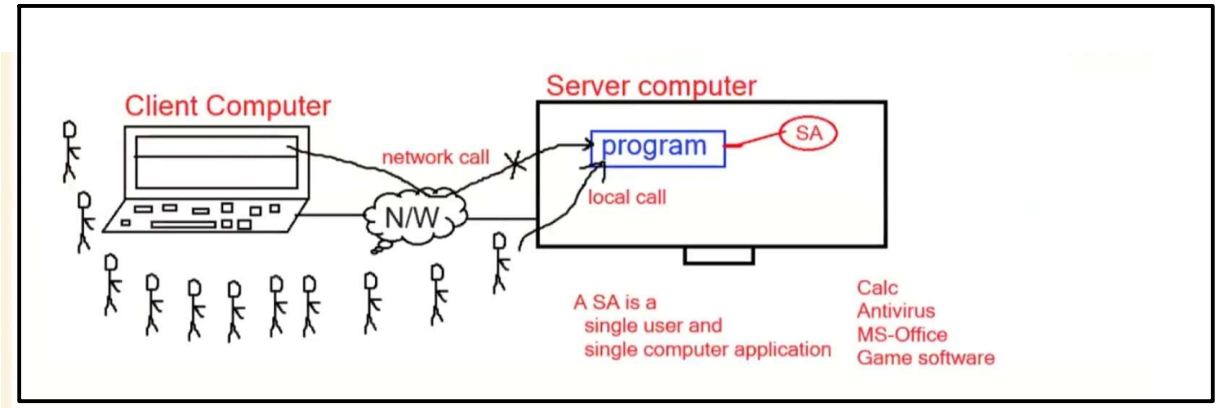

- Internet Application
  - An application that is installed in one system and if it is accessible from other systems with a network via internet is called as internet application.
  - An internet application is a multi-user and multi-computer applications.
  - For example :
    - YouTube, Instagram, Facebook, amazon, zoom software etc.

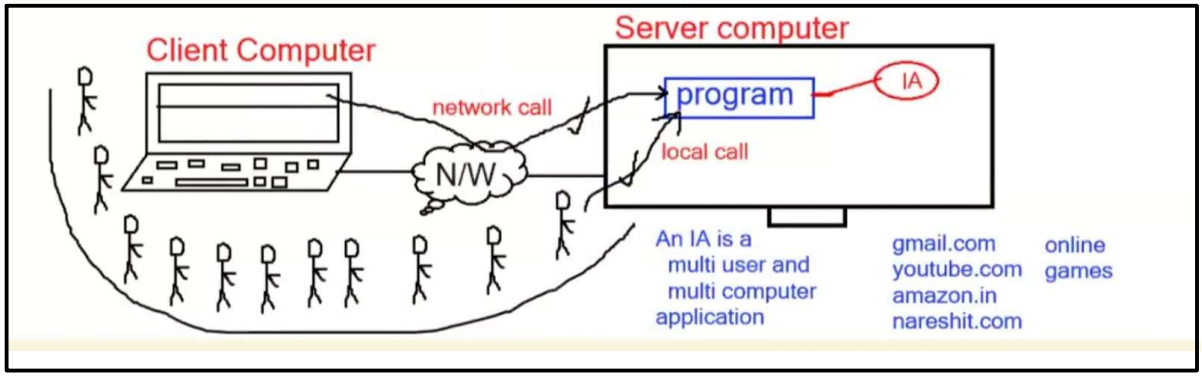

Conclusion:

- Any software you install in your system and use it, it is a stand-alone application
- Any software you access it via browser and use it without installing in your system, then it is internet application.